hydrology®
WATER RE | DISCOVERED

Product Specification

Modern Fox Wall Mount or Surface Mount Basin

Model: 828402

Collection: Kast

Origin: UK

Description: Concrete Wall Mount or Surface Mount Basin in Zinc 20.87" x 9.06" x 5.51"

GENERAL FEATURES & SPECIFICATIONS

- Concrete Basin
- Wall or surface mount
- Front edge thickness: 1.57"
- Dimensions: 20.87"L x 9.06"W x 5.51"H
- For use with wall mounted or deck mounted tap
- Option for left or right hand basin
- Available with or without brackets
- Material: Concrete
- Finishes available: White, Ash, Ivory, Fossil, Stone, Zinc, Iron, Black, Peach, Blush, Ember, Brick, Wheat, Oyster, Sandcastle, Golden, Sage, Mint, Green, Forest, Heather, Dove, Duck Egg, Teal, Mineral, Steel, Blue, Storm

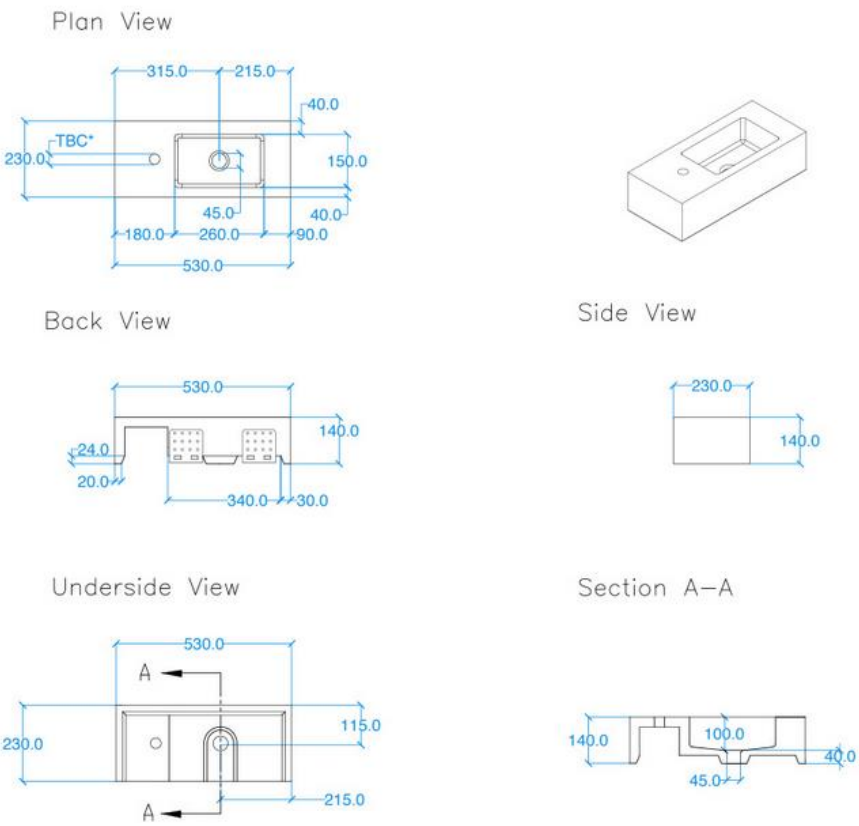

We cannot guarantee the accuracy of this information. Dimensions are nominal – for guidance only and are not to be used for pre-installation.

For further information call 312.832.9000 or visit us at hydrologychicago.com