hydrology®
WATER RE | DISCOVERED

Product Specification

Modern Fukasawa Ceiling Mount Shower Head

Style Number: 770496

Collection: Aboutwater

Origin: Italy

Description: Fukasawa Ceiling Mount Shower Head 9-1/2" Round Steel Construction w/ 10" Long Shower Arm w/ ½" Male NPT Fittings, Round Escutcheon, & Anti-Lime Scale System in Chrome

GENERAL FEATURES & SPECIFICATIONS

- Ceiling Mounted
- 9 1/2"
- Round
- Anti-lime Scale System
- Flow restricted to 2.5 GPM
- 2 GPM Spare Flow Restrictor Included
- 10" Long
- ½" Male NPT Fittings
- Round Escutcheon
- **Material: Brass & Stainless Steel**
- **Finishes: Chrome, Matte Gun Metal PVD, Matte British Gold PVD, Matte Copper PVD, Brushed Stainless Steel**

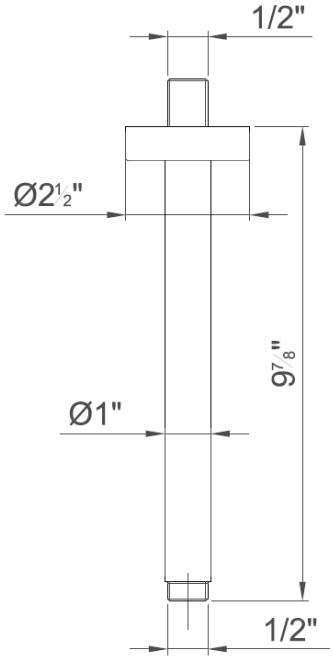

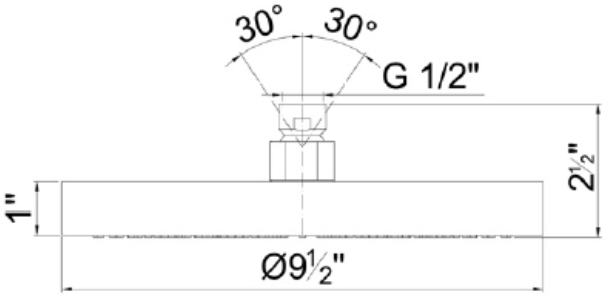

We cannot guarantee the accuracy of this information. Dimensions are nominal – for guidance only and are not to be used for pre-installation.

For further information call 312.832.9000 or visit us at hydrologychicago.com