hydrology®
WATER RE | DISCOVERED

Product Specification

# Modern Fukasawa Deck Mount Faucet

**Style Number: 753518**

**Collection: Aboutwater**

**Origin: Italy**

**Description: Fukasawa Deck Mount Two Hole Single Control Vessel Mixer w/ Extended 8-7/8" Spout Projection & Aerated Flow w/o Drain in Brushed Stainless Steel**

## GENERAL FEATURES & SPECIFICATIONS

- Deck Mounted
- Two Hole
- Single Control
- Extended Spout
- 8-7/8" Spout Projection
- Without Drain
- Aerated Flow
- Progressive Cartridge
- Flexible Supply Lines
- Max Flow Rate 1.5gpm
- **Material: Brass or Stainless Steel**
- **Finishes: Chrome, Matte Gun Metal PVD, Matte British Gold PVD, Matte Copper PVD, or Brushed Stainless Steel**

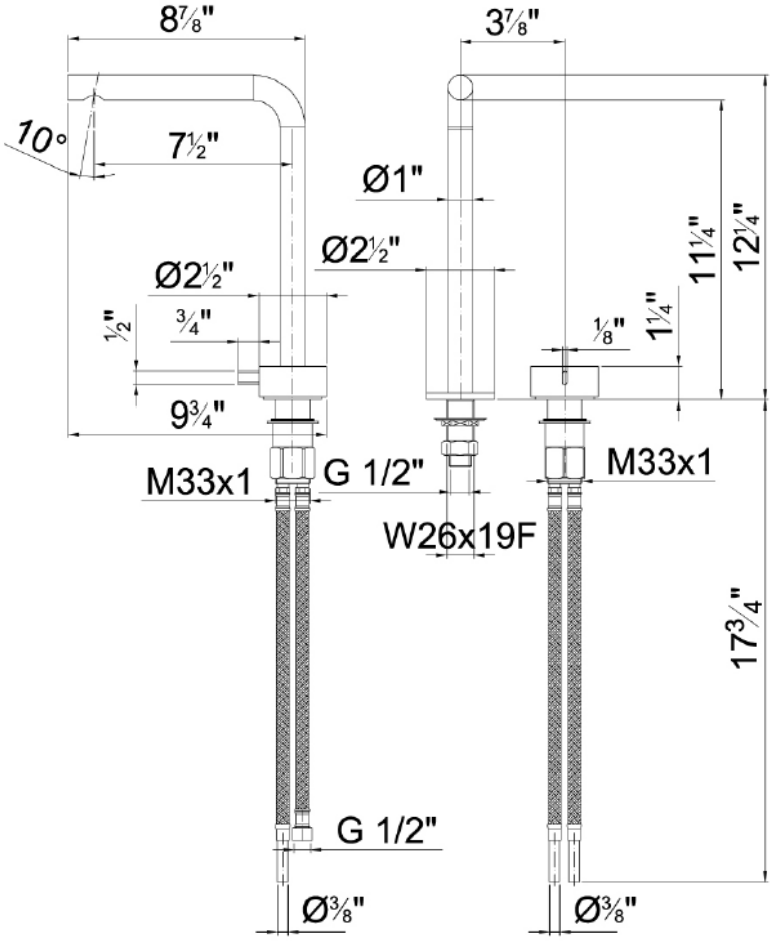


## CODES & STANDARDS

Cal Green, Water Sense Compliant, Code Approved for US & Canada and Lead Free NSF/ANSI 372-2010, California AB1953-2006, Vermont Bill S.152, Maryland House Bill 372, and Louisiana House Bill HB.471

We cannot guarantee the accuracy of this information. Dimensions are nominal – for guidance only and are not to be used for pre-installation.

For further information call 312.832.9000 or visit us at hydrologychicago.com