hydrology®
WATER RE | DISCOVERED

Product Specification

Traditional Malmaison Deck Mount Faucet

Style Number: 773330

Collection: THG

Origin: France

Description: Malmaison Deck Mount Lavatory Faucet Widespread w/ Metal Handles, 6-3/8" Spout Projection & Drain in Polished Gold

GENERAL FEATURES & SPECIFICATIONS

- Deck Mounted
- Widespread
- Metal Handles
- Drain Included
- 6-3/8" Projection
- 2.2GPM
- **Material: Brass**
- **Finishes: Polished Chrome, Stainless Steel, Brushed Stainless Steel, Polished Nickel, Matte Nickel, Matte Chrome, Satin Chrome, Light Coated Bronze, Black Nickel, Polished Gold, Satin Gold, Matte Gold, Silver Rhodium, Rose Gold, Soft Gold, Soft Matte Gold, Soft Satin Gold, Brown Bronze PVD, Matte Brown Bronze PVD, Polished Silver Antique, Matte Copper Antique, Nickel Antique, Brass PVD, Matte Brass PVD, Gold PVD, Matte Gold PVD, Nickel PVD, Matte Nickel PVD, Matte Blush PVD, Blush PVD, Graphite PVD, Matte Graphite PVD, Umber PVD, Matte Umber PVD**

CODES & STANDARDS

NSF 61s9, ASME A112.18.1-2005/CSA B125.1-05 & CA law AB 1953

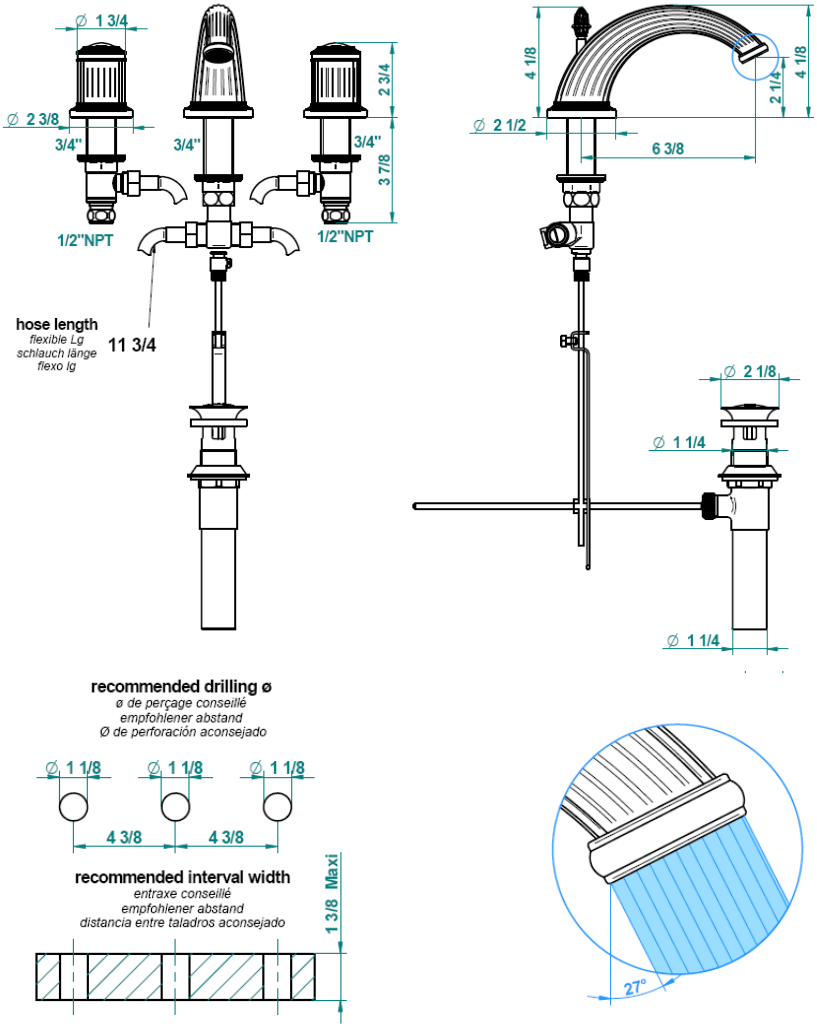

We cannot guarantee the accuracy of this information. Dimensions are nominal – for guidance only and are not to be used for pre-installation.

For further information call 312.832.9000 or visit us at hydrologychicago.com